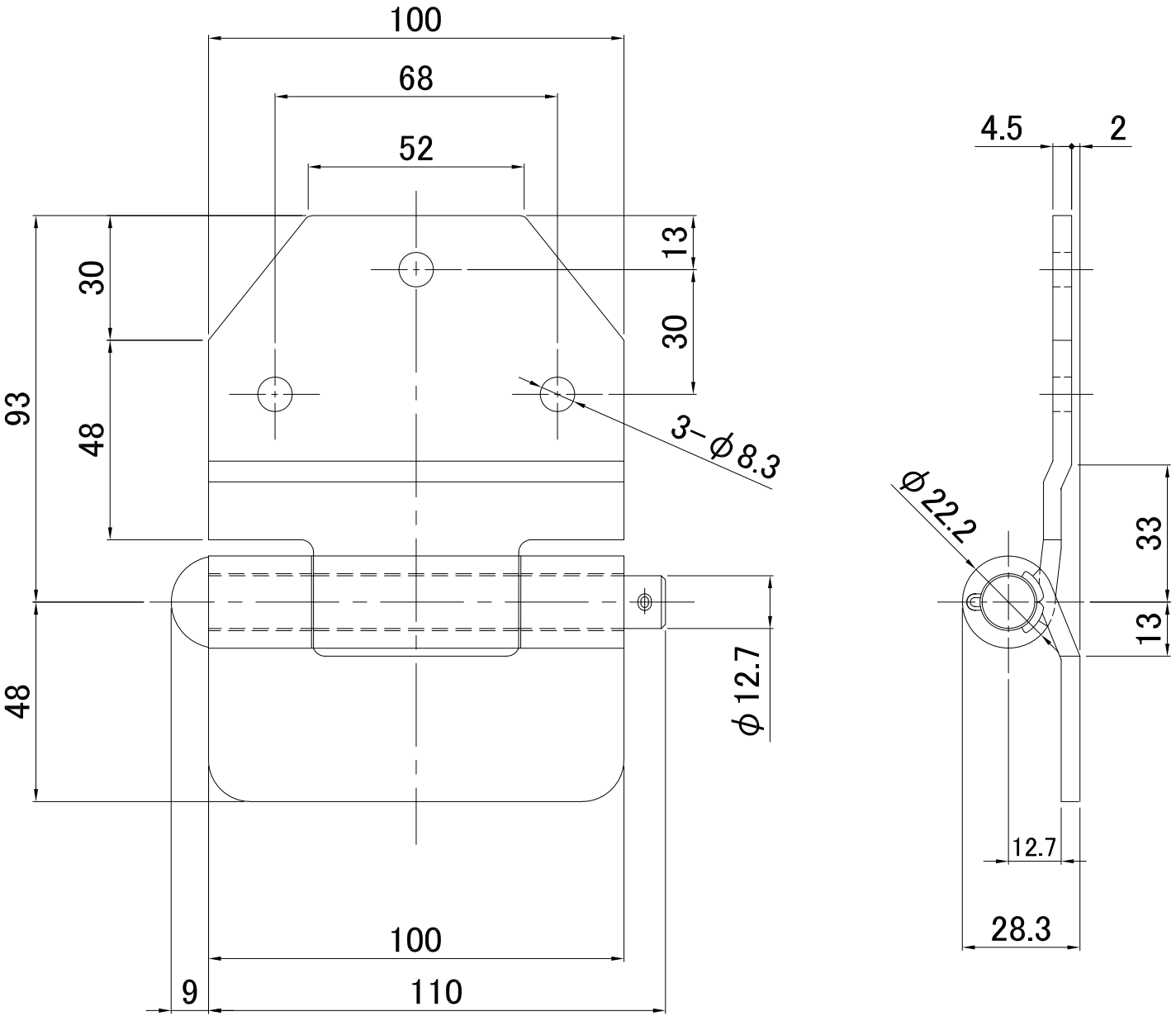
100
68
52
30
13
30
93
48
3-φ8.3
48
φ12.7
100
9
110
4.5
2
φ22.2
33
13
12.7
28.3