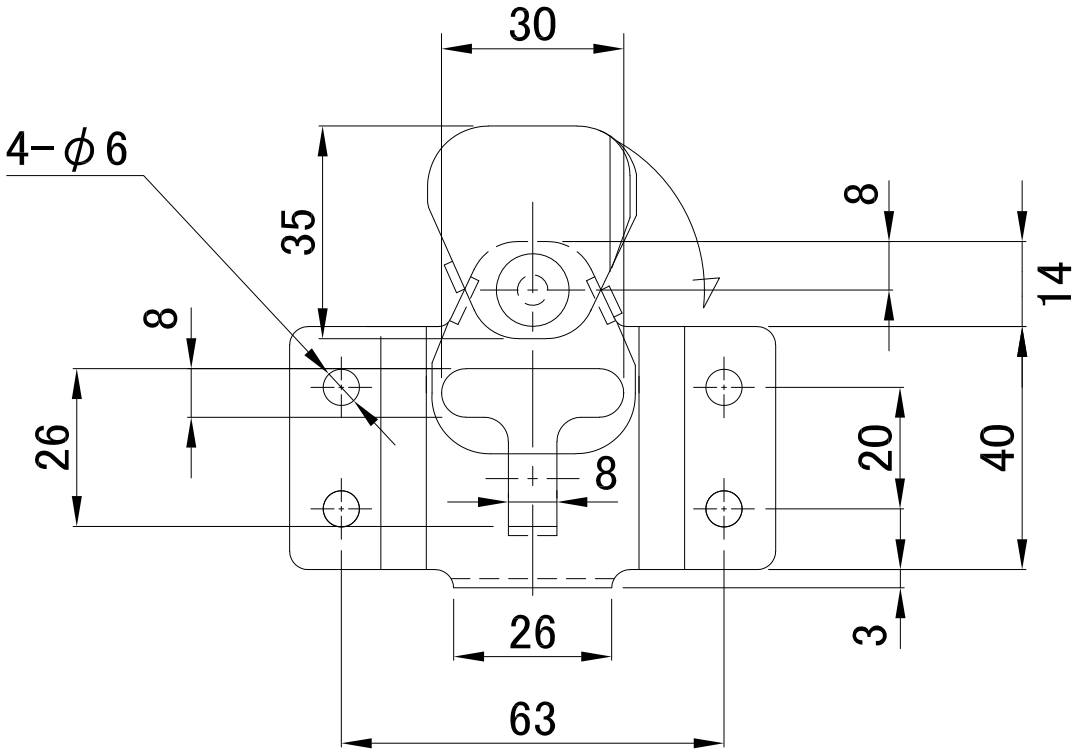
30
4−φ6
35
8
14
8
26
20
40
8
26
3
63

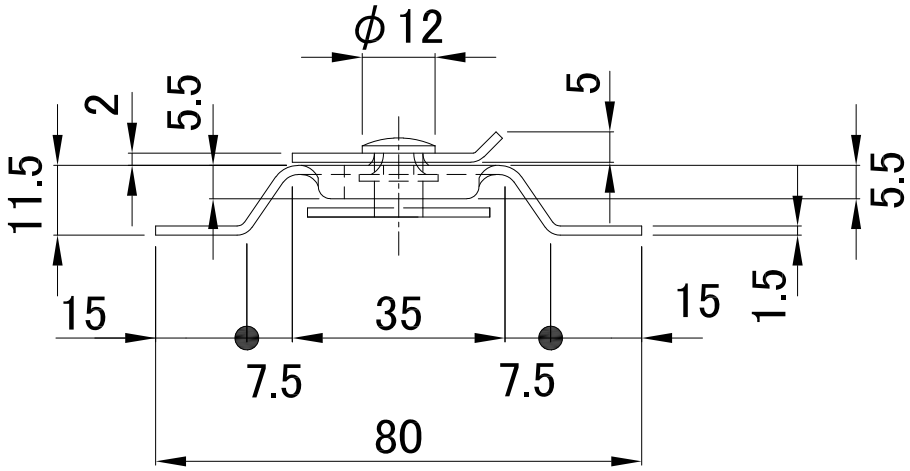
φ12
2
5.5
5
11.5
5.5
1.5
15
35
15
7.5
7.5
80